NOTE: DIMENSIONAL DRAWING FOR QUOTATION PURPOSES ONLY. DO NOT USE FOR CONSTRUCTION. DRAWING RELEASE NO. QCD0001.

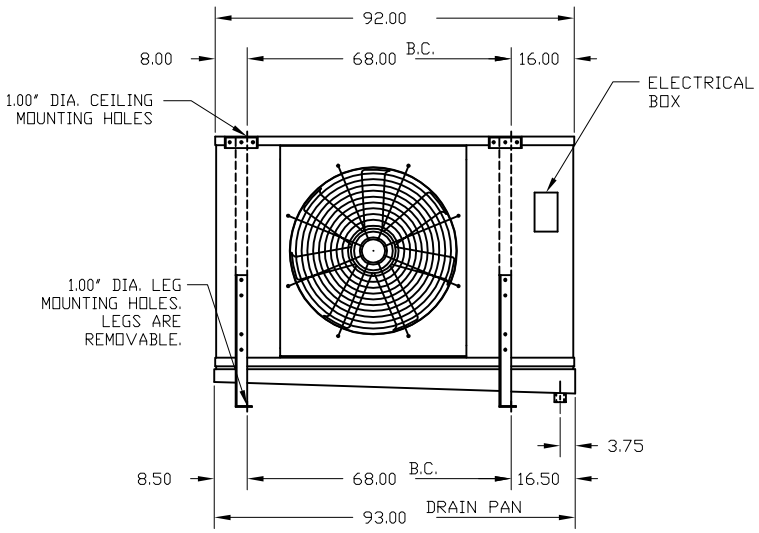


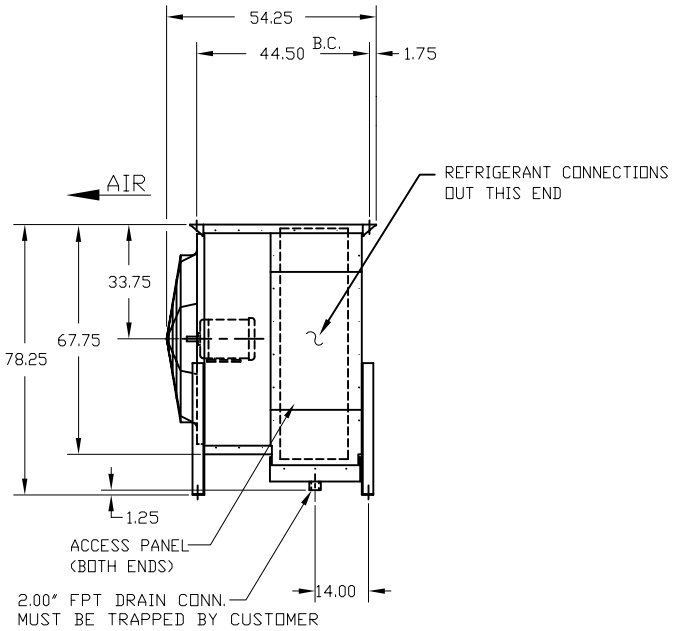


| DESIGN SPECIFICATIONS | | UNITS |
|---|---|---|
| UNIT COOLING CAPACITY | | BTUH |
| ROOM TEMPERATURE | | °F |
| SUCTION TEMPERATURE | | °F |
| REFRIGERANT | | – |
| *LIQUID FEED RATE | | GPM |
| AIR FLOW RATE | | CFM |
| EXTERNAL STATIC PRESSURE | | INWG |
| NOMINAL FIN SPACING | | FINS/IN |
| TOTAL SURFACE AREA | | SQ FT |
| APPROXIMATE WEIGHT | | LBS |
| COIL INTERNAL VOLUME | | CU FT |

*NOTE: LIQUID FEED PRESSURE MUST BE AT LEAST 5 PSIG ABOVE SUCTION PRESSURE.

WORK TO DIMENSIONS
DO NOT SCALE DRAWING

| | | | | | |
|---|---|---|---|---|---|
| SALES ORDER: | LINE: | NO. | CHANGE DESCRIPTION | DATE | CK'D |
| CUSTOMER P.O.: | | | REVISIONS | | |
| CUSTOMER NAME: | | | | | |
| JOB NAME: | | | | | |
| TAG UNIT: | | | | | |
| MODEL: PC 1 –32 – – – – –RH | | | | | |
| ITEM NO.: | | | | | |
| NO. REQ'D: | DATE: | DRAWN: | | | |
| SHEET | KRACK CORPORATION | | | | REV. |
| TOLERANCE: ±0.50" | | | | | |