NOTE: DIMENSIONAL DRAWING FOR QUOTATION PURPOSES ONLY. DO NOT USE FOR CONSTRUCTION. DRAWING RELEASE NO. QCD0001.

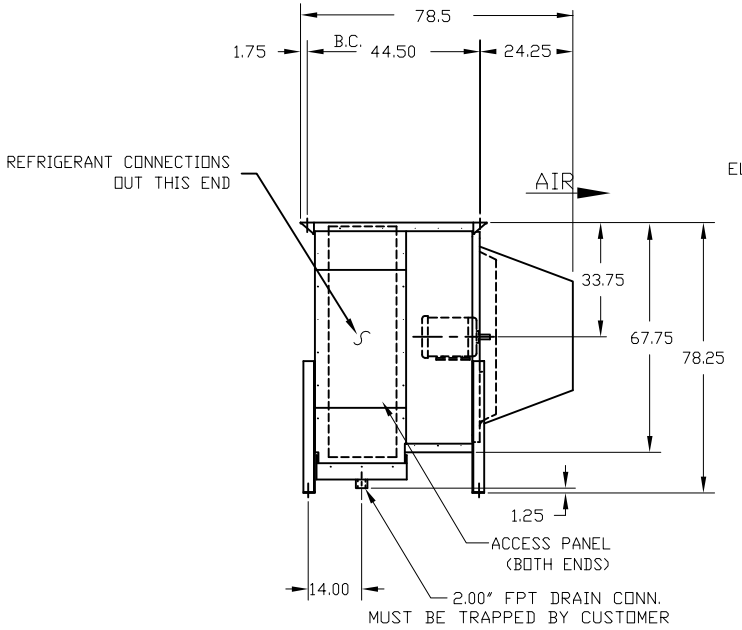


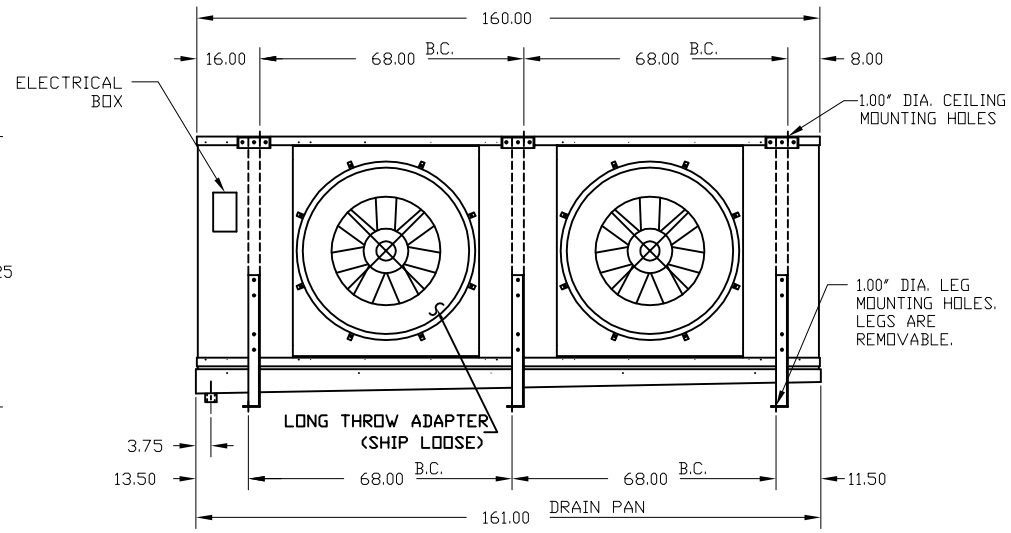


| DESIGN SPECIFICATIONS | | UNITS |
|---|---|---|
| UNIT COOLING CAPACITY | | BTUH |
| ROOM TEMPERATURE | | °F |
| SUCTION TEMPERATURE | | °F |
| REFRIGERANT | | – |
| *LIQUID FEED RATE | | GPM |
| AIR FLOW RATE | | CFM |
| EXTERNAL STATIC PRESSURE | | INWG |
| NOMINAL FIN SPACING | | FINS/IN |
| TOTAL SURFACE AREA | | SQ FT |
| APPROXIMATE WEIGHT | | LBS |
| COIL INTERNAL VOLUME | | CU FT |

*NOTE: LIQUID FEED PRESSURE MUST BE AT LEAST 5 PSIG ABOVE SUCTION PRESSURE.

WORK TO DIMENSIONS
DO NOT SCALE DRAWING

| NO. | CHANGE DESCRIPTION | DATE | CK'D |
|---|---|---|---|
| | REVISIONS | | |

SALES ORDER: | LINE:
CUSTOMER P.O.:
CUSTOMER NAME:
JOB NAME:
TAG UNIT:
MODEL: PC 2 –64 – – – – –LH
ITEM NO.:
NO. REQ'D: | DATE: | DRAWN:
SHEET
TOLERANCE: ±0.50"

KRACK CORPORATION

REV.