NOTE: DIMENSIONAL DRAWING FOR QUOTATION PURPOSES ONLY. DO NOT USE FOR CONSTRUCTION. DRAWING RELEASE NO. QCD0001.

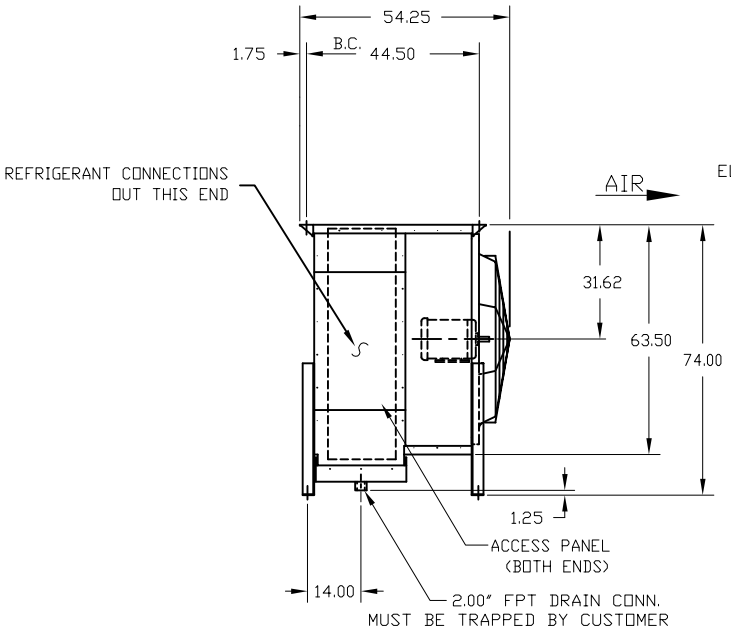

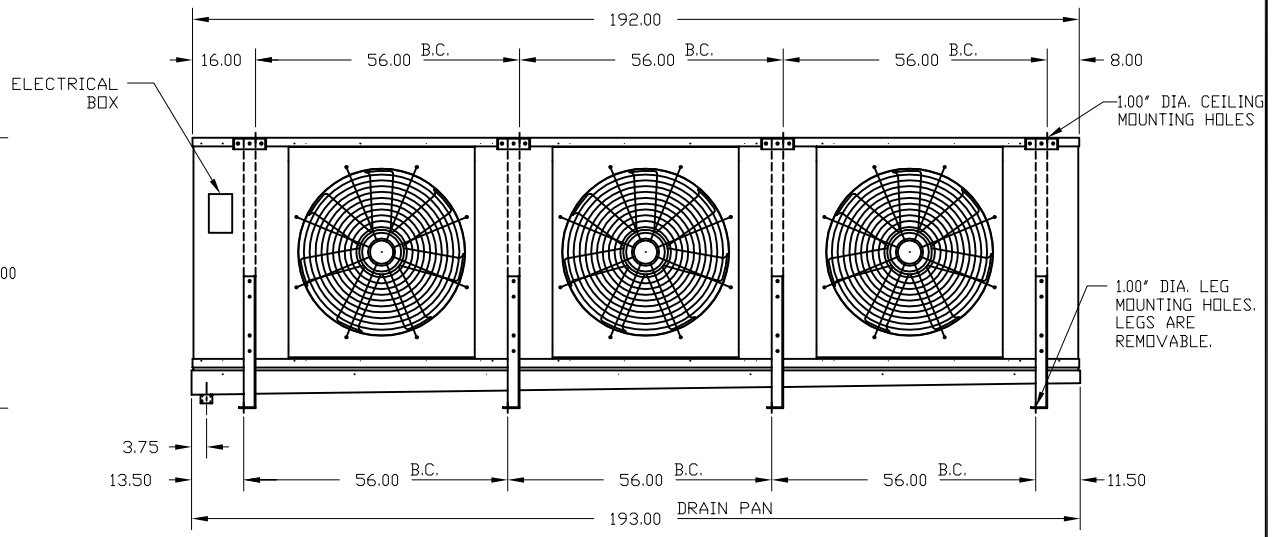

DESIGN SPECIFICATIONS		UNITS
UNIT COOLING CAPACITY		BTUH
ROOM TEMPERATURE		°F
SUCTION TEMPERATURE		°F
REFRIGERANT		–
*LIQUID FEED RATE		GPM
AIR FLOW RATE		CFM
EXTERNAL STATIC PRESSURE		INWG
NOMINAL FIN SPACING		FINS/IN
TOTAL SURFACE AREA		SQ FT
APPROXIMATE WEIGHT		LBS
COIL INTERNAL VOLUME		CU FT

*NOTE: LIQUID FEED PRESSURE MUST BE AT LEAST 5 PSIG ABOVE SUCTION PRESSURE.

WORK TO DIMENSIONS
DO NOT SCALE DRAWING

NO.	CHANGE DESCRIPTION	DATE	CK'D
	REVISIONS		

SALES ORDER: | LINE:
CUSTOMER P.O.:
CUSTOMER NAME:
JOB NAME:
TAG UNIT:
MODEL: PC 3 –74 – – – – –LH
ITEM NO.:
NO. REQ'D: | DATE: | DRAWN:
SHEET
TOLERANCE: ±0.50"

KRACK CORPORATION

REV.