NOTE: UNIT SHOWN IN SHIPPING POSITION.
UNIT HAS TO BE RAISED & SUPPORTED,
LEGS UNBOLTED, LOWERED TO
MOUNTING POSITION & REBOLTED.

NOTE: DIMENSIONAL DRAWING FOR QUOTATION PURPOSES ONLY. DO NOT USE FOR CONSTRUCTION. DRAWING RELEASE NO. QCD0001.

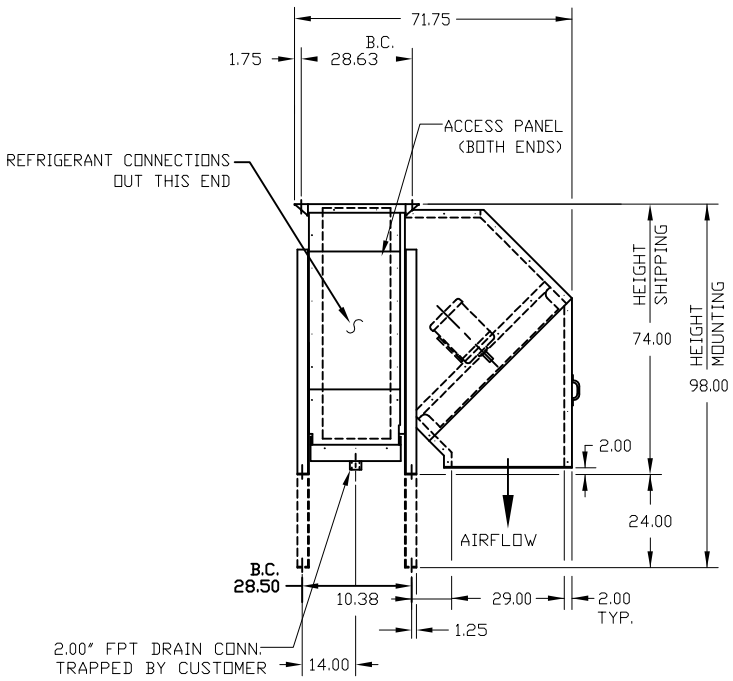

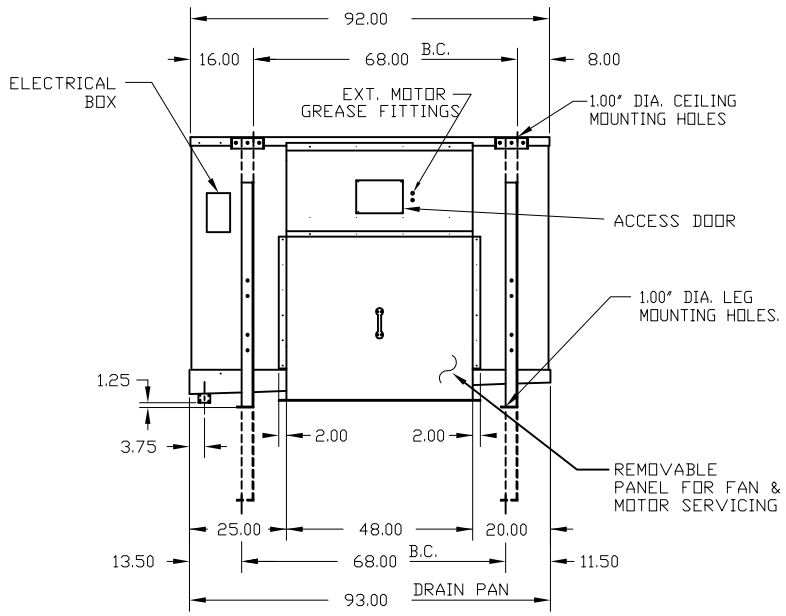

DESIGN SPECIFICATIONS		UNITS
UNIT COOLING CAPACITY		BTUH
ROOM TEMPERATURE		°F
SUCTION TEMPERATURE		°F
REFRIGERANT		–
*LIQUID FEED RATE		GPM
AIR FLOW RATE		CFM
EXTERNAL STATIC PRESSURE		INWG
NOMINAL FIN SPACING		FINS/IN
TOTAL SURFACE AREA		SQ FT
APPROXIMATE WEIGHT		LBS
COIL INTERNAL VOLUME		CU FT

*NOTE: LIQUID FEED PRESSURE MUST BE AT LEAST 5 PSIG ABOVE SUCTION PRESSURE.

WORK TO DIMENSIONS
DO NOT SCALE DRAWING

SALES ORDER:	LINE:	NO.	CHANGE DESCRIPTION	DATE	CK'D
CUSTOMER P.O.:			REVISIONS		
CUSTOMER NAME:					
JOB NAME:					
TAG UNIT:					
MODEL: PH 1 –31 – – – – –LH					
ITEM NO.:					
NO. REQ'D:	DATE:	DRAWN:			
SHEET	KRACK CORPORATION				REV.
TOLERANCE: ±0.50"					