ROWS #	A	B
4	57.75	62.00
6	65.75	70.00
8	71.75	76.00

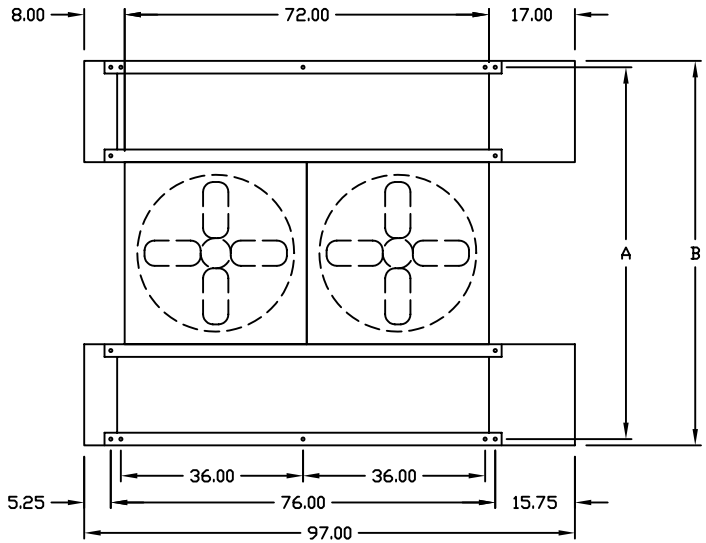

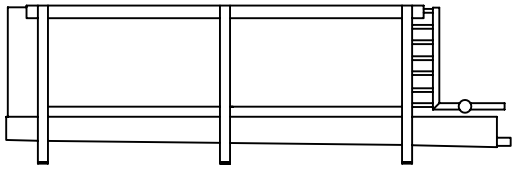

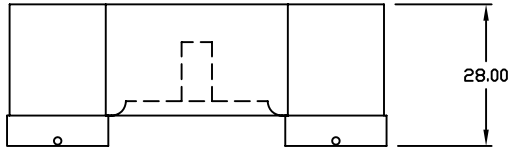

DESIGN SPECIFICATIONS		UNITS
UNIT COOLING CAPACITY		BTUH
ROOM TEMPERATURE		°F
SUCTION TEMPERATURE		°F
REFRIGERANT		–
AIR FLOW RATE		CFM
EXTERNAL STATIC PRESSURE		INWG
NOMINAL FIN SPACING		FINS/IN
TOTAL SURFACE AREA		FT^2
APPROXIMATE WEIGHT		LBS.

NO.	CHANGE DESCRIPTION	DATE	CHK'D

REVISIONS

SALES ORDER:	LINE:		
CUSTOMER P.O.:			
CUSTOMER NAME:			
JOB NAME:			
TAG UNIT:			
MODEL: STC2F 30"			
ITEM NO.:			
NO. REQ'D:	DATE:	DRAWN:	
SHEET			REV.
TOLERANCE: ±0.50"			